COMMERCIAL-GRADE
RESIDENTIAL GAS WATER HEATERS

ADAPT™ SC STANDARD CONDENSING TANKLESS WITH X3® SCALE PREVENTION TECHNOLOGY

Introducing A. O. Smith's ADAPT™ SC standard condensing gas tankless water heaters, delivering robust, on-demand performance and the flexibility to install in practically any residential setting.

FEATURES:

X3® SCALE PREVENTION TECHNOLOGY (PATENTED DESIGN)

- Integrated into all X3 models; optional accessory for Bypass (M) models and can be added at any time
- No annual descaling required with X3 models
- X3 models maintain like-new performance longer; extends expected life of unit up to three times versus unprotected unit

PERFORMANCE & EFFICIENCY

- 160,000, 180,000, 199,000 BTU/h
- 10,000 BTU/h min. input
- Max Flow Rate 10.5 GPM; 0.4 GPM activation; 0.26 GPM for continuous fire
- 0.95 UEF, ENERGY STAR® certified
- Ultra Low NOx – Complies with SCAQMD Rule 1146.2*

ULTIMATE FLEXIBILITY EASE OF INSTALLATION

- Universal indoor or outdoor installation; Outdoor Vent Cap Kit sold separately
- Exhaust venting, 2" PVC up to 50' (15.3 m); 3" PVC up to 150' (45.7 m)
- Flexible venting with PVC, CPVC, Polypropylene, or ABS Pipe (solid core only)
- Pressure relief valve included with X3 models
- Outdoor rated power cord standard on every unit
- Cascade up to 12 units with single cable per heater, cable included
- Approved for installation in manufactured homes

WARRANTY

- No hardwater exclusions on X3 models; exclusions apply to M models
- 15-year limited warranty on heat exchanger in residential applications
- 5-year limited warranty on all parts in residential applications
- 1-year limited warranty on heat exchanger and parts in commercial applications

*Ultra Low NOx – Complies with SCAQMD Rule 1146.2 and other air quality management districts with similar NG NOx emission requirements of 14 ng/J or 20 ppm at 3% O_2. Complies with SJVAPCD Rule 4308 and other air quality management districts with similar LP NOx emission requirements of 77 ppm.



ATM-160X3, ATM-180X3, ATM-199X3
with Integrated X3 Scale Prevention Technology



Optional Outdoor Vent Cap Kit sold separately; Fits all ATM-X3 and ATM-M models.



ATM-160M, ATM-180M, ATM-199M
with Bypass Cartridge - easily add X3 Scale Prevention any time as optional accessory

Complies with SCAQMD Rule 1146.2 California and Texas

ENERGY STAR

DESIGN CERTIFIED

C SA LLC US

AHRI CERTIFIED® www.ahridirectory.org

CSA/ANSI Z21.10.3 • CSA 4.3

© May 2026 A. O. Smith Corporation. All Rights Reserved

www.hotwater.com | 800-527-1953 Toll-Free USA | A. O. Smith Corporation | 500 Tennessee Waltz Parkway | Ashland City, TN 37015

COMMERCIAL-GRADE
RESIDENTIAL GAS WATER HEATERS

ADAPT™ SC STANDARD CONDENSING TANKLESS WITH X3® SCALE PREVENTION TECHNOLOGY

		ATM-160M-N ATM-160M-P	ATM-160X3-N ATM-160X3-P	ATM-180M-N ATM-180M-P	ATM-180X3-N ATM-180X3-P	ATM-199M-N ATM-199M-P	ATM-199X3-N ATM-199X3-P
Installation Type		Indoor / Outdoor*		Indoor / Outdoor*		Indoor / Outdoor*	
X3® Scale Prevention Technology		Optional Accessory	Integrated	Optional Accessory	Integrated	Optional Accessory	Integrated
Gas Consumption Input	Min. BTU/H	10,000					
	Max. BTU/H	160,000		180,000		199,000	
Fuel Type		Natural Gas - N, Liquid Propane - P					
Heat Exchangers		Primary Copper, Secondary Stainless Steel					
Uniform Energy Factor (UEF)		0.95					
Maximum GPM**		10.5 GPM					
Activation GPM		0.4 GPM					
Continuous Fire GPM		0.26 GPM					
Water Pressure Min. - Max.		15 - 150 PSI (40 PSI Recommended for Maximum Flow)					
Supply Gas Pressure (NG)	Min. in W.C. (kPa)	4.0 (1.0)					
	Max. in W.C. (kPa)	10.5 (2.6)					
Hot/Cold Connections		3/4" NPT					
Gas Connection		3/4" NPT					
Temperature Settings Min. - Max.		100°F (38°C) - 140°F (60°C); Default 120°F (49°C)					
Ignition System		Electronic Ignition					
Power Supply		120V, 60Hz, <5A					
Sound Level		51 dB***					
Elevation		Certified from Sea Level to 7,800' (2,377.4 m); Outdoor to 5,400' (1,645.9 m)					
Freeze Protection+		- 5°F (-21°C)					
Venting - Exhaust, Intake	Type	Power Direct Vent					
	Size, Max Run	2", 50' (5.08 cm, 15.3 m); 3", 150' (7.6 cm, 45.7 m)					
	Material	PVC, CPVC, Polypropylene, or ABS Pipe (solid core only)					
Dimensions - Unit	Height****	32.5" (82.5 cm)	40.4" (102.6 cm)	32.5" (82.5 cm)	40.4" (102.6 cm)	32.5" (82.5 cm)	40.4" (102.6 cm)
	Width	17.1" (43.5 cm)					
	Depth	11.9" (30.1 cm)					
	Weight	83 lb. (37.7 kg)					
Dimensions - Shipping†	Height	17.4" (44.2 cm)					
	Width	22.1" (56.2 cm)					
	Depth	39.25" (99.7 cm)					
	Weight	93 lb (42.2 kg)					

All models are Energy Star® certified.
* Universal install; outdoor installation requires outdoor vent cap kit (Part No. 100369060) sold separately
**Current numbers based on factory settings.
***Measured in an anechoic chamber.
****Height with required cartridge installed; M models with Bypass Manifold cartridge, X3 models with Scale Control Media cartridge. From flue collar to tip of cartridge.
†Packaged and shipped on unit back.
+Internal freeze protection for heater only; both Bypass cartridge and X3 cartridge require anti-freeze kits sold separately
Included with Heater: Manual, Pressure Relief Valve (X3 models only), Wall Mounting Bracket and Hardware, Vent Port Screws, Cascading Cable, Bird Screens

COMMERCIAL-GRADE
RESIDENTIAL GAS WATER HEATERS

ADAPT™ SC STANDARD CONDENSING TANKLESS WITH X3® SCALE PREVENTION TECHNOLOGY DIMENSIONS

FRONT

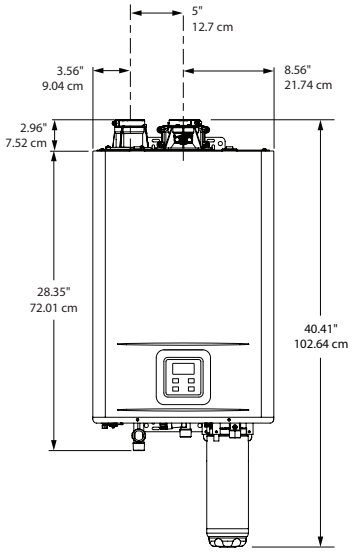

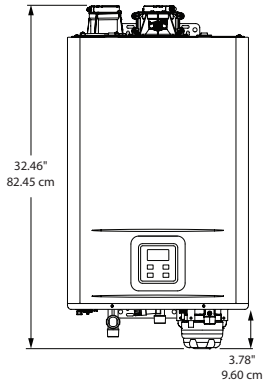

SIDE

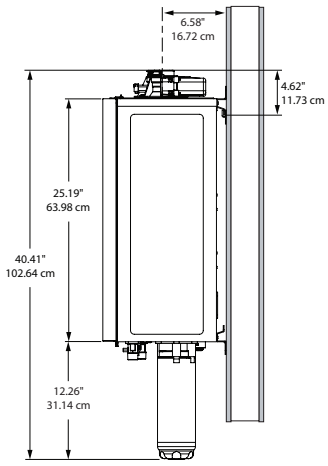

TOP

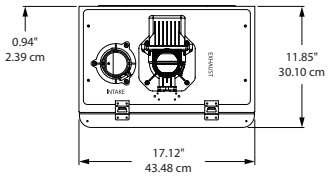

BOTTOM

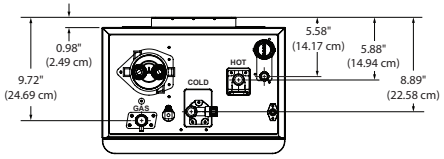

TM FLOW RATE CAPACITY

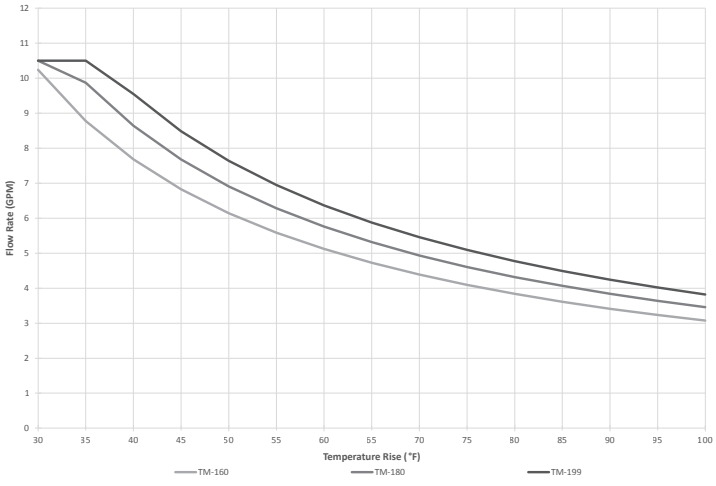

PRESSURE LOSS

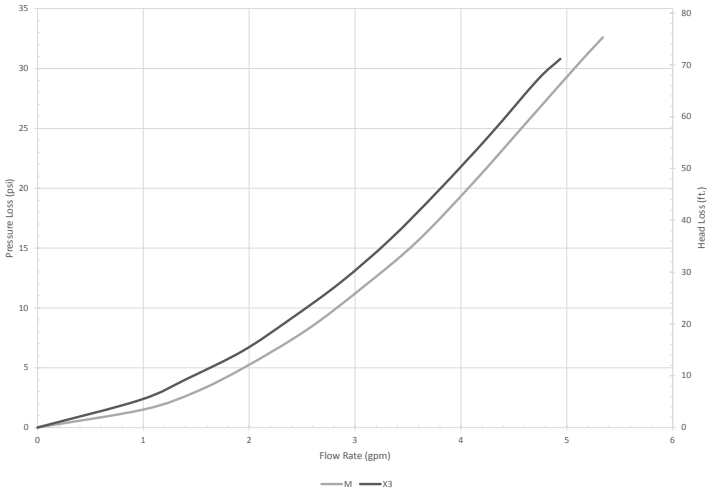

COMMERCIAL-GRADE
RESIDENTIAL GAS WATER HEATERS

ADAPT™ SC STANDARD CONDENSING TANKLESS WITH X3® SCALE PREVENTION TECHNOLOGY

Item		Description
X3 Cartridge 100368986		Add to an M model heater to prevent scale buildup and eliminate the need for annual descaling maintenance.
Wi-Fi Module Kit 100371922	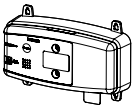	Wi-Fi Module for electronically connectng tankless water heaters to the internet and adapter to connect to the water heater. • Module (1x) • Cable (1x) • Adapter (1x)
Remote Temperature Controller 100383909	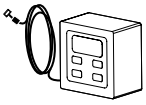	Remote Temperature Controller with 10' (3 m) cable.
Communication Cable - 10' (3 m) 100377341 **Communication Cable - 32' (10 m) 100377342**	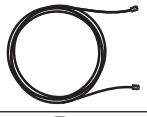	Replacement Communication Cable for Remote Temperature Controller or WIFI Module, or On-Demand Receiver, 10' (3 m). Extended Communication Cable for Remote Temperature Controller or WIFI Module, or On-Demand Receiver, 32' (10 m).
X3 Freeze Protection (X3 Models) 100325654	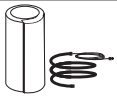	X3 Cartridge Freeze Protection can add an extra layer of freeze protection to external SCM cartridge. Cartridge not protected by heater's internal freeze protection.
Bypass Freeze Protection (M Models) 100371918		Bypass Freeze Protection can add an extra layer of freeze protection to external Bypass cartridge. Cartridge not protected by heater's internal freeze protection.
Pipe Cover 100383908	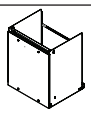	Pipe Cover protects plumbing connections to the heater while improving the appearance of the installation. Affixes to bottom of heater.
Neutralizer Assembly Kit 100112159		Neutralizer Assembly neutralizes the condensate (acidic water) that forms in the heat exchanger of the water heater. It connects to the condensate drain port of the water heater by using connectors included with the neutralizer kit.
Oudoor Vent Cap Kit 100369060		Vent cap kit and accessories for installing the tankless heater outdoors. Kit contains: • Vent Cap (1x) • User Interface Overlay (1x)
Isolation Valve Kit with Pressure Relief Valve 100112156	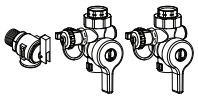	Isolation Valve supports routine maintenance and allows for draining and flushing the heater; whereas, the Pressure Relief Valve, as the name implies, serves to limit internal pressure in the system. Not necessary for X3 models. Check local codes for applicability.

For Technical Information, call 800-527-1953. A. O. Smith Corporation reserves the right to make product changes or improvements without prior notice.

© May 2026 A. O. Smith Corporation. All Rights Reserved

www.hotwater.com | 800-527-1953 Toll-Free USA | A. O. Smith Corporation | 500 Tennessee Waltz Parkway | Ashland City, TN 37015